REPORT OF UNDERWAY pCO_2 MEASUREMENTS IN SURFACE WATERS AND THE ATMOSPHERE DURING October - November 2002

RVIB Nathaniel B. Palmer Cruise 02/6

S. C. Sutherland, Taro Takahashi, Colm Sweeney

Lamont-Doherty Earth Observatory of Columbia University
Palisades, NY 10964

17 March, 2015

1. General

1-a) The Cruise:

This cruise was conducted off the coast of Southern California, in conjunction with USCG certifications exercise. It departed Port Hueneme on 30 October and returned there on 8 November. The track goes to near 125°W and contains some time in Santa Barbara Channel. This is a nearly unique opportunity for some close to the coast data, as normally the 200 mile Exclusive Economic Zone (EEZ) of other countries requires us to shut the system down.

This file has been reprocessed during March 2015. The timing of the seawater temperature data measured with ThermoSalinoGraph (TSG) unit was adjusted to match the timing of input temperature (Teq) of the pCO2 equilibrator in order to account for the transit time of water from the ship's intake to the pCO2 system.

1-b) The pCO_2 data:

The primary source of data are files created by the ships data acquisition system, (RVDAS). A program runs to combined pCO_2 data, thermosalinograph (TSG) data, and several other parameters, such as latitude, longitude, windspeed, water-flow in the uncontaminated seawater line, etc. We used raw pCO_2 , TSG temperature and salinity, and position from the ship's GPS data in the merged RVDAS file. These files have the name: NDP0206.dxxx, where xxx is the 3 digit Julian Date. They are stored in the rawdata subdirectory, and have been merged into rawdata.txt. We then edit rawdata.txt to remove extra observations both before the first set of standards, and after the last one.

This cruise used only 4 standards, rather than the normal 5, and **procpco2.prg** was changed accordingly. It uses a 3rd order polynomial to fit the response curve exactly through all the standards.

Thirty-two seawater and one air observation are made between standard sets. Each observation involves flowing the equilibration gas for 180 seconds. We also flow the air for 180 seconds before stopping for an observation. Details on these and other aspects of the analysis system are explained later.

Standards:

Cylinder	Concentration (ppm)
Nitrogen (UHP)	0.0
CC02231	236.29
CC02235	105.20
CC15551	362.8

A 3rd order calibration curve is used with all 4 standards, as described in Section 2.

Standards flow for about 70 seconds before an observation is made.

1-c) AIR data:

There was some kind of unexplained operation going on with the air line, and all the air data were rejected.

To calculate ΔpCO_2 we use the Global View CO_2 data, extrapolated from the end of 2000 through the early part of 2002. The last observations in that file are for year 2001. A longterm trend is fitted to these observations, then extrapolated forward. Naturally, there is some uncertainty in this extrapolation, but it should be less than ±0.5 ppm . This value goes into the “vco2_air” and "gvvco2_air" variables in the **0206sfc** database.

1-d) Editing:

Generally, several criteria were used to reject data points:

a. When the water flow dropped below 20 l/min, and for 6 additional scans to allow the system to return to equilibrium.
b. When the flow of sample falls below 24 ml/min, and 3 additional scans afterward.
c. When the TSG temperature, equilibration temperature, or the difference between them fall outside a specitied value from running mean temperature.
d. Manually selected observations.

With the benefit of 10 plus years of observations, editing, and analysis, we have rejected the running mean as a criteria for rejecting “outliers.” These systems just do not work. It is impossible to account for the rapid changes occurring naturally in open ocean systems, with eddies, meandering of currents, local weather, and mesoscale weather and still retain valid observations. Essentially the file is hand edited.

The documentation below in italics is, therefore, obsolete. I have chosen to retain it for continuity.

We used a mean and standard deviation based analysis technique. A running total of 9 data points are used to calculate mean and standard deviation of the three parameters, Teq, TSG temperature, and Teq - TSG Temperature. A minimum standard deviation of 0.1

is assigned where it's calculated value is smaller. This allows times when the temperature is very steady followed by more variation to be preserved. First all values are used to calculate mean and standard deviation. Then we go back through the file, rejecting data points where the temperatures are above the mean by at least one standard deviation (or 0.1). Then we also reject 4 additional data points after each instance of rejecting, to ensure that the system is really back to equilibrium.

After these editing passes there are still values that are outliers, and individual observations and groups of observations are rejected. The criteria here is usually spikes in temperature, particularly where the temperature warms sharply. This normally implies some sort of flow problem, beyond what the water flow sensor is reporting. Salinity spikes also show flow and bubble problems, and that variable is used in a decision to reject observations. Of the **6,933 observations** of seawater pCO_2 we **rejected 201**, **retaining 6,732 records**. The program **editpco2.prg** performs this editing operation.

To create a **0206sfc**.dbf surface format file, we use only ACCEPTED pCO_2 values, but ALL the data are retained in the pco2data.dbf database in the subdirectory: \NBPALMER\NBP02_6\SURFACE\PCO2DATA. We estimate the air value from the Globalview CO2database (as explained under 1-d) AIR data . The program **make0206.prg** performs this process. The program also adds salinity from the edited salinity file saldata.dbf in the salinity subdirectory (see other data below).

1-f) Other Data:

Salinity: There is a program, **procsal.prg** in the subdirectory salinity which performs editing of the salinity data. The system uses a mean and standard deviation of 15 data points. There are five passes through the data. Three calculate mean and standard deviation, two perform edits. After each of the first 2 calculation passes, data points are rejected if outside 1 standard deviation. A minimum standard deviation of 0.02 is assigned. After the second editing pass (4th through the data), mean and standard deviation of the remaining data are calculated using only accepted values. Between accepted values the mean is unchanged. This file **saldata.dbf** is then used as the source for salinity in the master file **0206sfc.dbf.**

Wind speed units are meters $seconds^{-1}$.

2. MEASUREMENTS OF pCO_2 IN SURFACE WATERS

2-a) <u>The LDEO Underway System for Surface Water pCO_2 Measurements:</u>

The system for underway measurements of pCO_2 in surface waters consists of a) a water-air equilibrator, b) a non-dispersive infra-red CO_2 gas analyzer and c) a data logging system. The measurement system is schematically shown in Fig. 1, and is similar with the one described in Bates et al. (1998). Each of these units and the data reduction procedures used will be described below.

Figure 1 - The underway pCO_2 system used for the measurements of pCO_2 in surface waters during the Southern Ocean JGOFS (AESOP) Program.

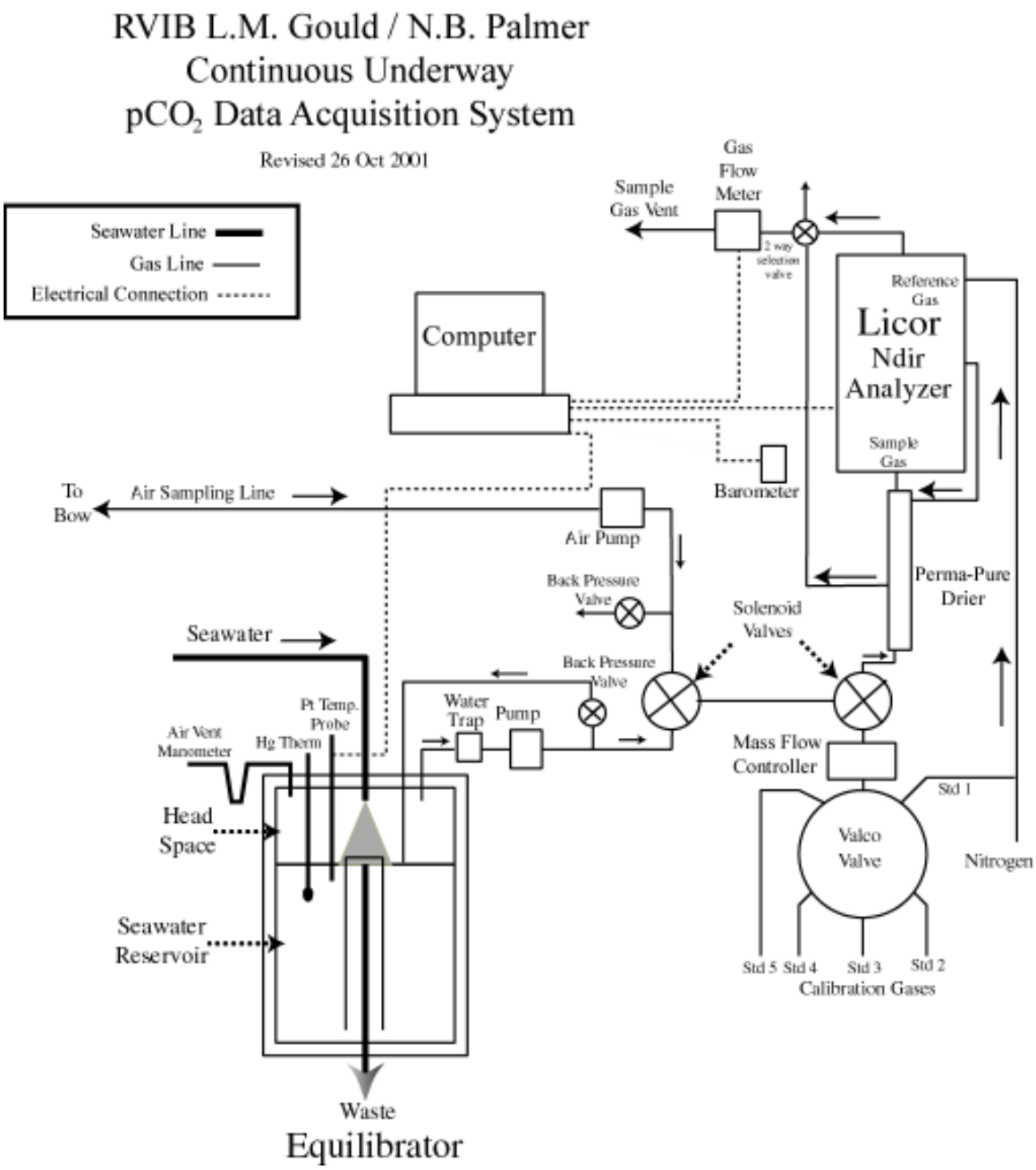

2-b) Water-air Equilibrator:

The equilibrator has a total volume of about 30 liters and is equipped with a specially designed drain which maintains automatically the level of water in the equilibrator at a constant level at about half the height of the equilibrator leaving about 15 liters of headspace. Seawater from the ship's uncontaminated water line is continuously pumped into the equilibrator at a rate of about 10 liters/min, giving a mean residence time of water in the equilibrator of about 1.5 minutes. The headspace above the water serves as an equilibration chamber. A carrier gas (commonly marine air) is drawn into the chamber by a diaphragm pump, and exchanges CO_2 with a continuous flow of seawater sprayed into the chamber through a shower head. Because of large gas-water contact areas created by fine water droplets as well as gas bubbles in the pool of water, CO_2 equilibration between the carrier gas and seawater is achieved rapidly with a e-folding time of 2 to 3 minutes. Under normal operating conditions, the carrier gas in the equilibration chamber is pumped into the infra-red gas analyzer at a rate of about 50 ml/min. At this rate, the residence time of the carrier gas in the equilibration chamber is about 300 minutes, that is about 100 times as long as the equilibration time. Therefore, the carrier gas in the head space is always in equilibrium with water. The over all response time of the equilibrator system has been estimated to be of an order of several minutes. The large volume of water in the equilibrator is chosen in order to have a large thermal inertia of the equilibrator, so that the effects of room temperature changes on the equilibration temperature may be minimized. The temperature of water in the equilibrator is monitored continuously using a Guildline platinum resistance thermometer (readable to 0.05 ^{o}C) and recorded on the data logging computer. A calibrated mercury thermometer is also inserted in the equilibrator for testing the performance of the platinum thermometer.

At the gas intake end of the equilibrator, a flow indicator based on U-tube manometer is attached. This gives a visual confirmation for the fact that marine air is taken into the equilibration chamber at a desired flow rate. Since we operate the system with the equilibration chamber at the same pressure as the ambient room pressure, the total pressure, at which the gas was equilibrated, is measured using a precision electronic barometer (Setra Model 270, Action, MA) outside the equilibrator. This equilibration pressure is also logged on the computer.

The temperature and salinity of seawater at the in situ conditions were measured using a SeaBird Model SBE-21 thermosalinograph aboard the N. B. Palmer and a SIO/ODF thermosalinograph unit based on Neil Brown sensors aboard the R. Revelle. The precision of the report temperature data has been estimated to be about 0.005 ^{o}C.

2-c) Infra-red CO_2 Gas Analyzer:

The equilibrated gas was passed through a water trap (to collect aerosols and condensates), mass flow controller and a reverse flow naphion dryer (PermaPure flushed with pure nitrogen gas) to remove water vapor (to a level of –20°C), and was introduced into the IR sample cell at a rate of about 50 ml/min for CO_2 determinations. A LI-COR infra-red gas analyzer (Model 6251, Lincoln, NB) was used. After about 3 minutes of

purging period, the gas flow was stopped and readings were recorded on the computer. Although an electronic circuit was provided by the manufacturer in order to linearize the CO_2 response, it exhibited a few inflexions that deviated from linearity by a few ppm. Therefore, we chose not to use the outputs from the linearization circuit supplied by the manufacturer. Instead, we used five standard gas mixtures (one pure nitrogen and four CO_2-air mixtures) during the expeditions, and established response curves using the raw output from the analyzer. The CO_2 concentrations in the gas mixtures were calibrated using the SIO standards determined by C. D. Keeling's group using the manometric method. The concentrations of CO_2 in the standard gas mixtures were summarized above.

During normal operations, each of the standard gas mixtures was passed through the analyzer for 70 to 90 seconds at a rate of about 60 ml/min. This replaced the IR analyzer cell completely with the new gas. The flow was stopped for 5 seconds and then a millivolt reading from the analyzer was taken and recorded. Samples of equilibrated air and marine air were pumped through the analyzer for 180 seconds (3 minutes) at a rate of about 50 ml/min to purge the previous sample in the IR cell. The flow was stopped for 5 seconds and a reading for the analyzer output was recorded. This procedure was intended to eliminate errors due to fluctuations of the dynamic pressure within the IR cell by irregular gas flow rates. The slow flow rates used for samples were required for the removal of water vapor using the PermaPure membrane dryer. We analyze 32 seawater and one air sample between two sets of calibration runs using the five standard gases.

2-d) <u>Data Logging System:</u>

The following values were recorded on a laptop computer. The sample locations were derived from a GPS positioning unit that is a part of our surface water pCO_2 system. The CO_2 readings for samples were recorded once every 3 minutes (180 seconds), and those for the standard gas mixtures once every 1.5 minutes.

Date,
Time (GMT),
Sample ID (standard gas cylinder numbers, seawater CO_2, atmospheric CO_2)
Barometric pressure in the laboratory (to 0.1 mb)
IR cell temperature,
Gas flow rate in the IR cell (to 0.1 ml/min),
Temperature of equilibration (to 0.01 ^{o}C),
Analyzer output (millivolts to 0.1 mv)
CO_2 concentration in dry gas sample (preliminary based on the last response curve), and pCO_2 (preliminary value based on the last response curve).

The ships RVDAS system adds several other data elements from various sensors and equipment. The list is:

Latitude, Longitude, Thermosalinograph temperature, thermosalinograph salinity, fluorometer voltage, wind speed, wind directiion, barometric pressure, water flow in the uncontaminated seawater line.

2-e) Data Reduction Procedures:

The concentration of CO_2 in the sample was computed by the following way based on the millivolt reading and time of the reading. The millivolt reading taken for each of the five standard gases at the time of sample measurement was computed by linearly interpolating as a function of time using the readings taken before and after the respective standard gases were analyzed. This yields millivolt reading for each of the five standard gases at the time when the sample was analyzed. These five values were fit to a fourth-order polynomial equation (with five constants to be determined). This serves as the response curve. The CO_2 concentration in the sample was computed using the response curve that was established at the time of each sample analysis. This method has been demonstrated to yield more reliable CO_2 values compared with those computed, for example, using a least-squares fit of a quadratic or cubic functions to the five calibration points. The method described above yields atmospheric CO_2 values that are consistent with those reported for the South Pole and the Cape Grim by the Climate Monitoring and Diagnostics Laboratory/NOAA in Boulder, CO.

The partial pressure of CO_2 in seawater, $(pCO_2)sw$, at the temperature of equilibration, Teq, in the unit of microatmospheres (μatm) was computed using the expression:

$$(pCO_2)sw \text{ @ } Teq = (Vco_2)eq \times (Pb - Pw), \quad \text{.... .....[1]}$$

$(Vco_2)eq$ = the mole fraction concentration (ppm) of CO_2 in the dried equilibrated carrier gas;
Pb = the barometric pressure (that is equal to the total pressure of equilibration) in atmospheres; and
Pw = the equilibrium water vapor pressure at Teq (^oC) and salinity.

The water vapor pressure was computed using the following formulation;

$$Pw\ (atm) = (1/760)x(1 - 5.368x10^{-4}x\ Sal) \times EXP\{[0.0039476 - (1/TK)]/1.8752x10^{-4}\}, \quad \text{..... [2]}$$

where Sal is salinity in PSU measured using the ship's thermosalinograph, and TK is the temperature of equilibration in ^oK.

The $(pCO_2)sw$ at the in situ temperature, T in situ, was computed using a constant value of 0.0423 % per ^oC for the effect of temperature (Takahashi et al., 1993):

$$(pCO_2)sw \text{ @ } T_{in\ situ} = (pCO_2)sw \text{ @ } Teq \times EXP[0.0423 \times (T_{in\ situ} - Teq)].$$

The value for Tin situ is taken to be the seawater temperature measured by the ship's thermosalinograph at the time of pCO_2 measurements. Teq is generally warmer than Tin situ by 0.5 ~ 0.8 ^oC. Hence the temperature correction is normally less than 3% of pCO_2 values.

The over all precision of the reported pCO_2)sw values has been estimated to be about $\pm$1.5 uatm.

3. MEASUREMENTS OF pCO_2 IN THE ATMOSPHERE

3-a) Measurements:

The air measurement system is shown schematically in Fig. 1. Uncontaminated marine air samples were collected about 10 m above the sea surface using a DEKORON tubing (1/4" i.d., Calco Inc., PA), a thin-wall aluminum tubing protected by plastic casing. The intake was located at the middle of the foremast about 10 m above the sea surface. A KNF Neuberger air pump that was located near the IR analyzer was used to pump air through the tubing and into the IR analyzer. Even when air samples were not analyzed, the pump was on all the time to keep the air flowing through the sampling line. For the analysis, the air sample was passed through a water trap and a drying column to remove water vapor (the same PermaPure column as used for the equilibrated gas) and introduced into the IR cell for CO_2 analysis at a rate of about 50 ml/min. After 3 minutes of purging the cell, the flow was stopped for 5 seconds and the IR millivolt output reading was recorded.

3-b) Data Processing:

The partial pressure of CO_2 in the air, (pCO_2)air, was computed in the unit of microatmospheres (μatm) in the same way as that for seawater using Eq. [3] below:

$$(pCO_2)air = (Vco_2)air \times (Pb - Pw), \quad [3]$$

$(Vco_2)air$ = the mole fraction concentration (ppm) of CO_2 in the dried air sample;
Pb = the barometric pressure at sea surface in atmospheres; and
Pw = the equilibrium water vapor pressure at Tin situ (^oC) and salinity given by Eq. [2].

The precision of the atmospheric pCO_2 values have been estimated to be about $\pm$ 1 μatm.

4. REFERENCES CITED

Bates, N. R., Takahashi, T., Chipman, D. W. and Knapp, A. H. (1998). Variability of pCO_2 on diel to seasonal time scales in the Sargasso Sea. Jour. Geophys. Res., 103, 15567-15585.

CO_2 Group, Lamont-Doherty Earth Observatory. (1999) "pCO_2 Equilibrator Users Manual", LDEO of Columbia University, Palisade, NY, pp.10.

Takahashi, T., Olafsson, J., Goddard, J., Chipman, D. W. and Sutherland, S. C., (1993). Seasonal variation of CO_2 and nutrients in the high-latitude surface oceans: A comparative study. Global Biogeochemical Cycles, 7, 843-878.